SUPERIOR LISTENING SYSTEMS
AUDIO CLARITY REDEFINED

Product Technical Data Sheet

Model 1590

Description

The 1590 is a high quality single 15" two-way passive design. It serves as a multipurpose box that offers solutions for fill coverage, front of house PA and stage monitoring.

The 1590 high frequency section features a high performance PRD500 planar ribbon transducer designed and manufactured by SLS Loudspeakers. The unique design and properties of the planar ribbon driver allows for a very clear delivery and transient accuracy even at the limits of its performance. The PRD500 is contained within a 90 degree die cast aluminum waveguide that is rotatable within the cabinet.

The low frequency section uses a single high-powered 15" driver designed with an aluminum basket, neodymium magnet structure and high-temperature edge-wound voice coil.

The 1590 contains an audiophile grade crossover delivering smooth response and consistent polar patterns throughout the crossover region.

Key Features:

- PRD500 ribbon high frequency driver delivers unsurpassed sound quality
- Open and clear sound at high SPL due to advanced transducer technology
- Multi-purpose box design
- Small format
- Handle and pole socket
- 90 degree wide horizontal coverage with rotatable ribbon

Product Specifications	
Operating Range [1]	55Hz - 20,000Hz
Sensitivity (1W/1M) [2]	96dB
Horizontal Coverage Angle -6dB [3]	90 Degrees
Vertical Coverage Angle -6dB [3]	30 Degrees
Power Handling [4]	300W (49 Volts) AES/2
Recommended Amp Power for Max Output	600 Watts @ 8 ohms
Max SPL (calculated) 1 Meter	121dB Cont. / 127dB Peak
Nominal Impedance	8 Ohms
Crossover Frequency	Internal Passive 1500Hz
Transducers - Low Freq.	15" Woofer
High Freq.	PRD500 Ribbon
Input	NL4 x2
Dimensions	30" (76.2cm) H 19" (48.26cm) W 13" (33cm) D
Enclosure	13ply Baltic Birch
Weight	55lbs (25kg) Shipping 70lbs (31.6kg)
Rigging	None provided
Finish Options	Black Latex White Latex Paintable Natural Finish

1. LF at -10dB, HF -6dB at 40kHz on-axis however response above 20kHz is limited by air absorption and DSP sampling rates in typical PA applications.
2. Full bandwidth pink noise is applied and amplified to a level and measured at the loudspeaker terminals - corresponding to 1 Watt as referenced to the loudspeakers nominal impedance. SPL is measured in an anechoic environment in the loudspeakers far field. Data is extrapolated to 1 Meters distance from the loudspeaker.
3. Averaged from 1000Hz to 10kHz
4. AES established with ambient temperature at 22C in accordance with AES/2-1984 standard. IEC stated in RMS voltage according to IEC 268-5

Applications

Developed for a wide range of professional applications where the highest quality and intelligibility of sound is required

- Front of House PA
- Stage Monitoring

1650 W. Jackson Ozark, MO 65721 (417) 883-4549

SUPERIOR LISTENING SYSTEMS
AUDIO CLARITY REDEFINED

1590 Drawings

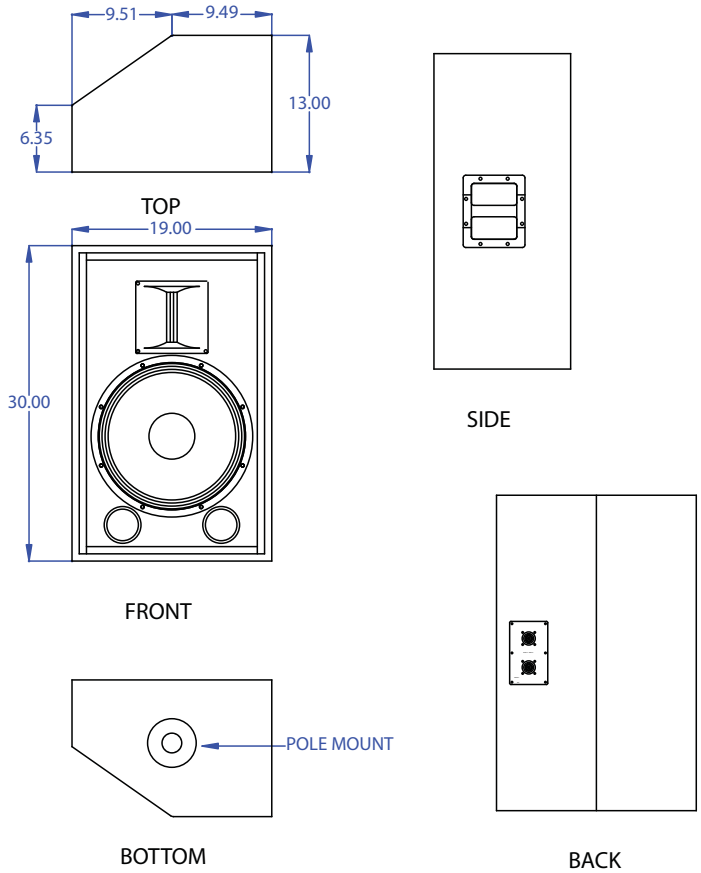

Polars

Horizontal Axis

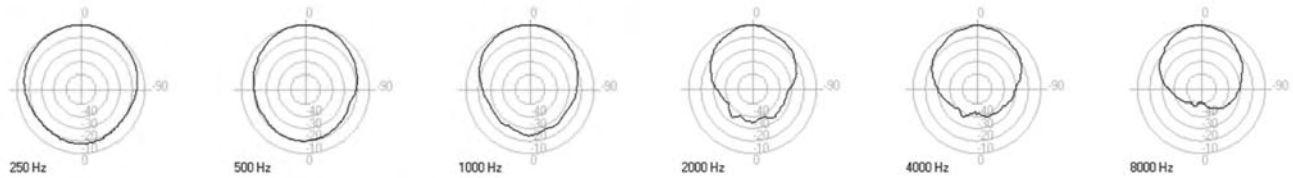

Vertical Axis

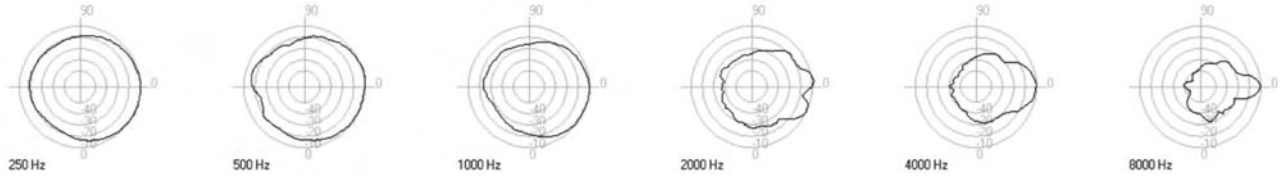

1650 W. Jackson Ozark, MO 65721 (417) 883-4549