MA390C

3 AXIS OVERHEAD & SURROUND SPEAKER SYSTEM

SLS AUDIO A DIVISION OF DOLBY LABORATORIES 1650 W. JACKSON OZARK, MO 65721 417-323-7000

TECH DATA SHEET

Description:

The new EXPRESS SERIES MA390C 3-AXIS Speaker System from SLS Audio has been developed to reduce the time and expense involved with installing overhead speakers needed for Dolby Atmos cinema applications.

Featuring a 300W, 12" coaxial full-range speaker and passive cross-over, the MA390C is housed in a spherical shaped, molded enclosure that enables quick installation and easy three-axis rotation for fulfilling Atmos aiming configurations.

When installed using the optional RCT-24 Recessed Ceiling Kit, the setup provides a solution for applications with challenging sight lines and reduces projector beam obstructions.

The MA390C also works equally well for side and rear surrounds when used with the optional WMA-15 wall-mount rigging kit.

Key Features:

- Replaces a 2'x 2' (.6m x .6m) ceiling tile when used with optional rigging kit
- Reduces Atmos ceiling speaker installation time by not requiring any rigging hardware attached to building truss other than a simple safety cable
- A portion of the speaker is above the ceiling grid decreasing projector beam obstruction when using optional inset rigging kit
- Ceiling grid supports the speaker and optional rigging kit
- Ceiling tile rigging kits do not break plenum space
- 12" Coaxial speaker rated @300W-RMS, 96dB Sens.
- Spherical shaped speaker enclosure design that allows for quick installation and easy aiming with three axis movement capabilities
- Ships ready to install from a single point, (typically all-thread) giving the user three axis (pan, tilt and rotation)adjustments without the need for additional brackets or hardware
- Two overhead rigging kits available FCT-24 / RCT-24
- WMA-15 Wall-Mount Kit -Includes sheet-rock anchors

Specifications/MA390C*

Operating Range	60Hz to 20,000Hz
Sensitivity (1W@1M)[1]	96dB
Coverage Angle[2]	90 Degrees (Conical)
Continuous Power Rating[3]	300W AES
Recommended Amplifier	600W @ 8 Ohms
Max SPL (calculated) 1M	121dB Cont/ 124dB Program
Nominal Impedance	8 Ohms
Transducers LF HF	 12" Woofer 1.75" Coaxially Mounted
Input	Barrier Strip
Dims	20" (508mm) H 21.7" (551mm) W 16.1" (410mm) D
Enclosure	Molded
Net Weight	28 lbs. (12.7kg)
Optional Accessories	FCT-24 Flat, Metal Tile Bridge RCT-24 Recessed, Metal Tile Bridge WMA-15 Wall Mount Kit

*Due to product improvement research, SLS Audio reserves the right to make changes to existing products without notice.

1. A sine wave sweep is applied to a voltage level measured at the loudspeaker terminals corresponding to 1W@1M as referenced to the loudspeakers nominal impedance and the measuring distance. SPL is measured in an anechoic environment in the loudspeakers far field with the exception of subwoofers which are measured in half space. Sensitivity is determined by a Log/Log averaging method from 315Hz to 16kHz in the anechoic environment. Subwoofers use the same method with the half space measurement but within their specified operating bandwidth.

2. Averaged from 500Hz to 8kHz

3. AES established in accordance with AES/2-2012 standard.

RCT-24
Recessed Ceiling Kit

FCT-24
Recessed Ceiling Kit

Rev: 1608

MA390C

3 AXIS OVERHEAD & SURROUND SPEAKER SYSTEM

SLS AUDIO A DIVISION OF DOLBY LABORATORIES 1650 W. JACKSON OZARK, MO 65721 417-323-7000

TECH DATA SHEET

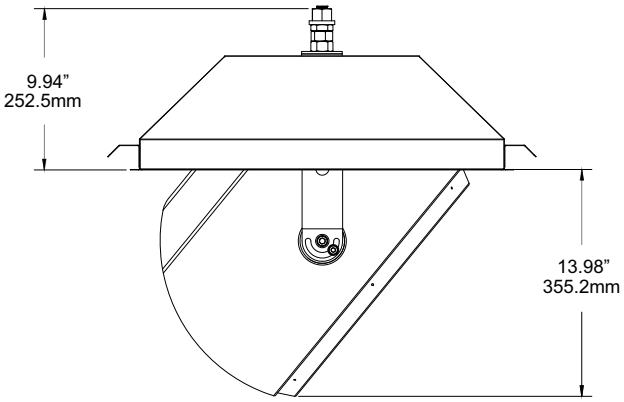

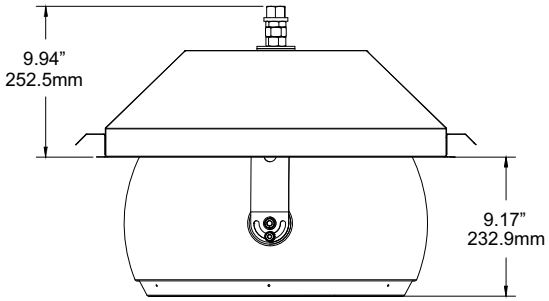

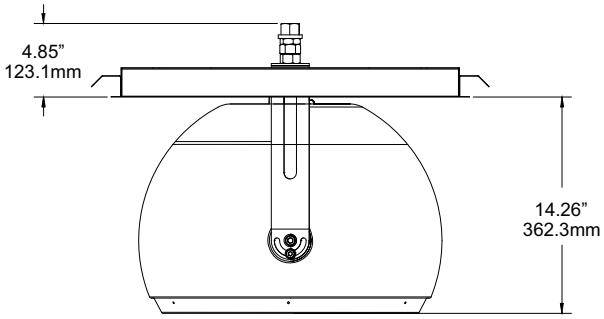

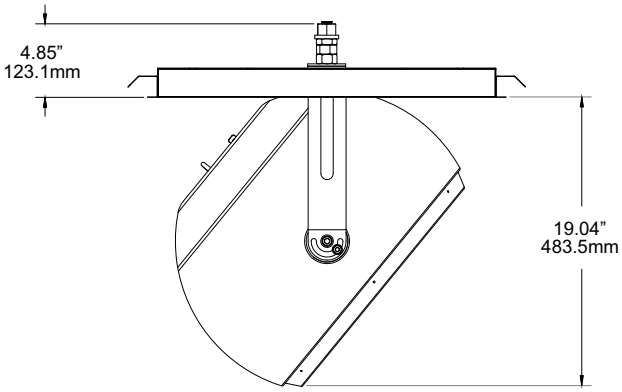

Rev: 1608

SLS and the SLS Audio symbol are trademarks of Dolby Laboratories Licensing Corporation.
Dolby and Dolby Atmos are registered trademarks of Dolby Laboratories.
All other trademarks remain the property of their respective owners.
© Dolby Laboratories 2016 All rights reserved.